2009

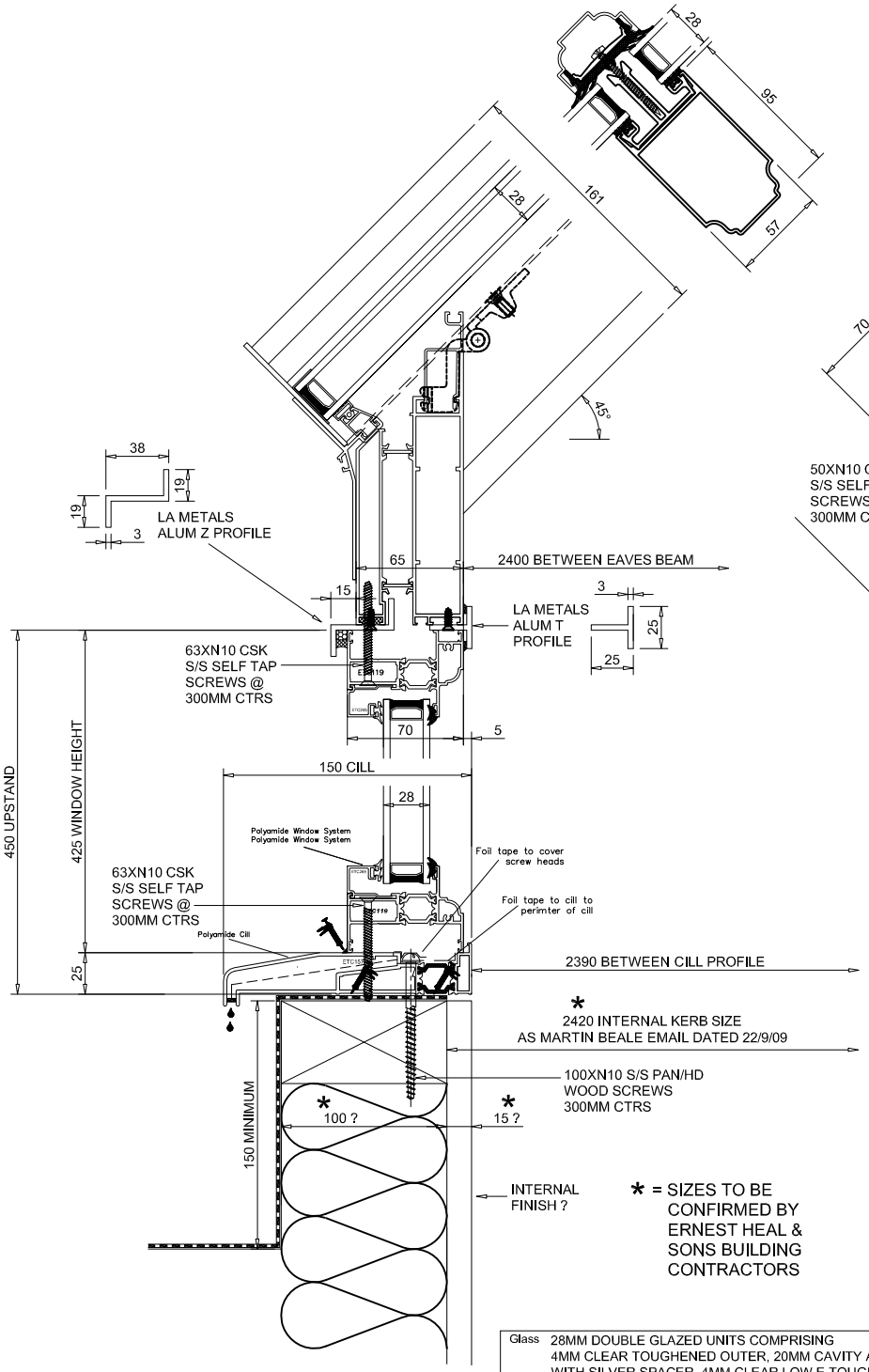

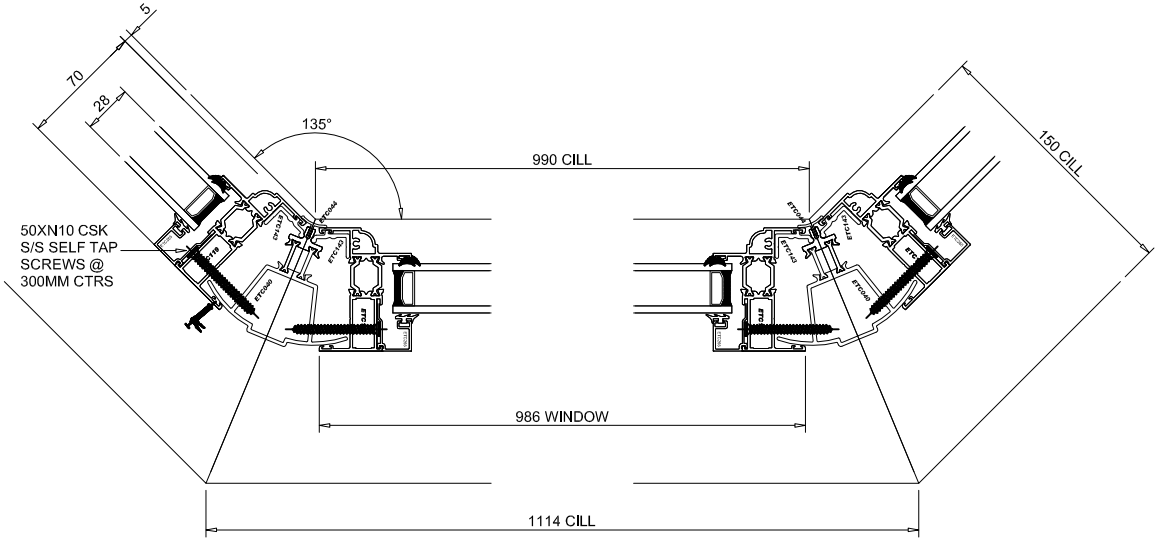

Rev.	Comments	Date

DETAILS by WWD

H P G Howells Patent Glazing
Clock House
Forge Lane
Cradley Heath
West Midlands
B64 5AL
Tel :- 01384 820060
Fax :- 01384 820061
e-mail :-
enquiries@howellsglazing.co.uk

Glass: 28MM DOUBLE GLAZED UNITS COMPRISING 4MM CLEAR TOUGHENED OUTER, 20MM CAVITY ARGON FILLED WITH SILVER SPACER, 4MM CLEAR LOW E TOUGHENED INNER | CENTRE PANE U VALUE = 1.2 W/MK2

Finish: POLYESTER POWDER COATED FINISH REF WHITE RAL 9910 SATIN

Drawing title	Scale	Date	Customer	Site	Contract No.	Drawing No.
OCTAGONAL LANTERN ROOFLIGHT GLAZING	NTS	2/9/2008	ERNEST HEAL & SONS BLDG	COALWAY METHODIST CHAPEL, OLD ROAD, COALWAY, COLEFORD, GLOUCESTERSHIRE	C4900	101

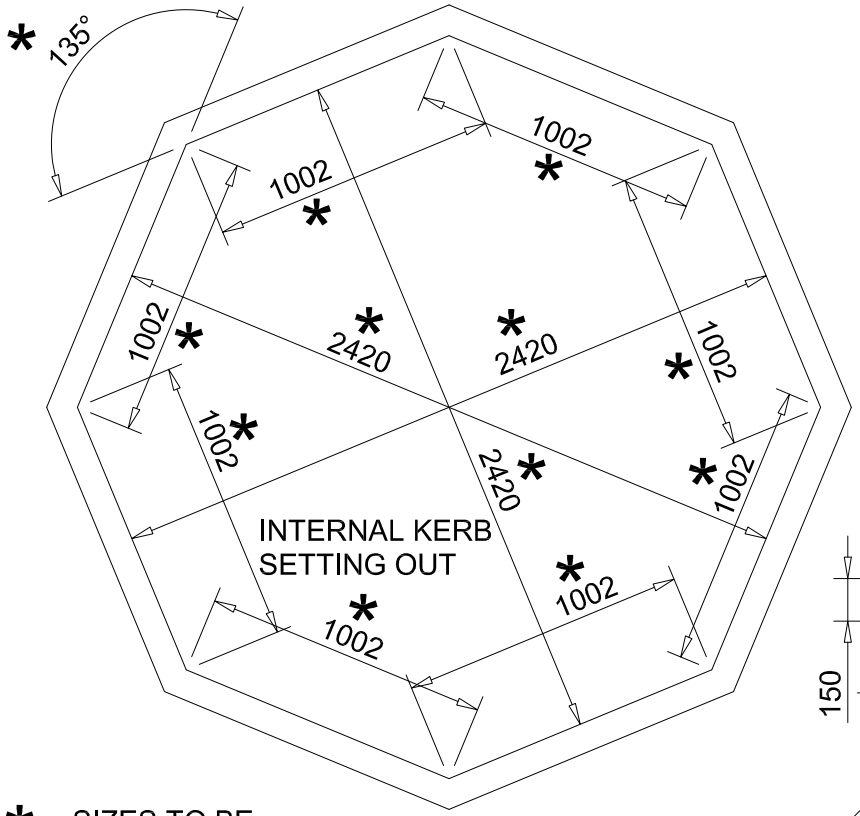

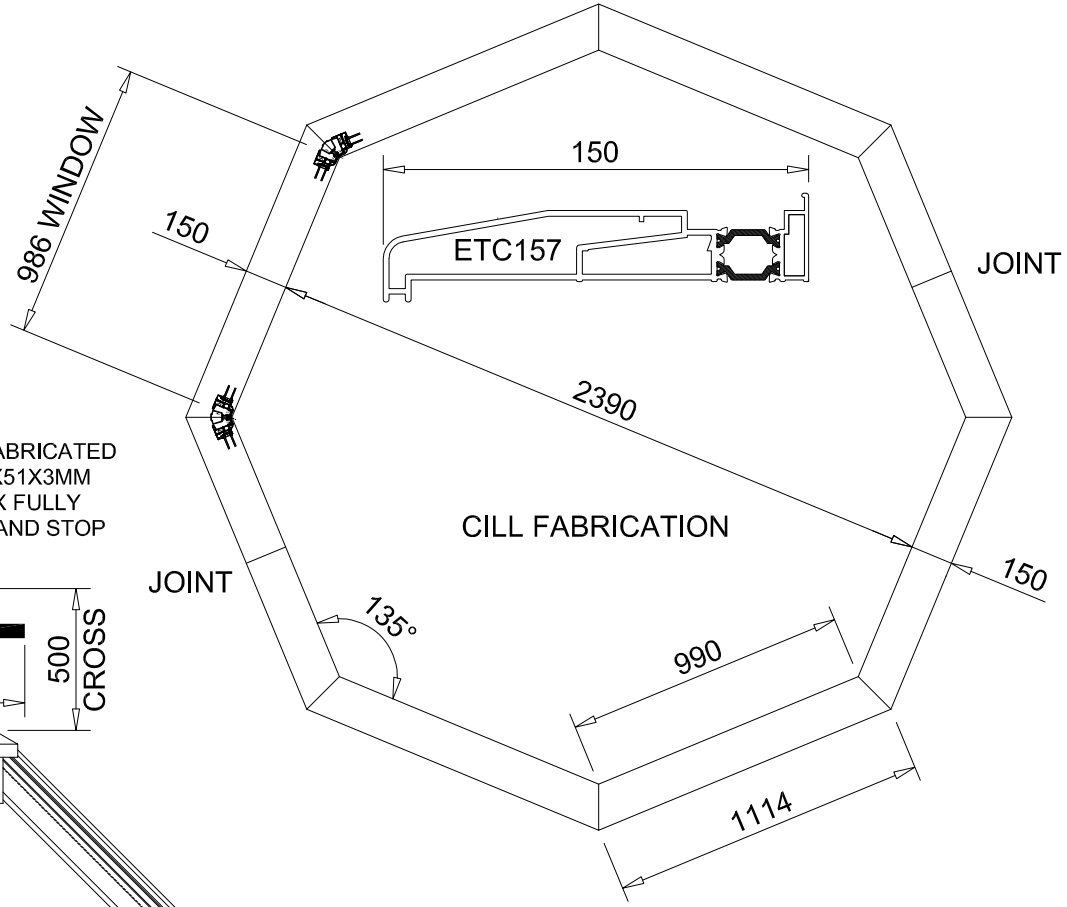

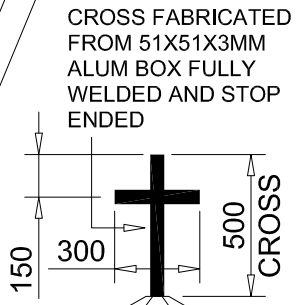

* = SIZES TO BE CONFIRMED BY ERNEST HEAL & SONS BUILDING CONTRACTORS

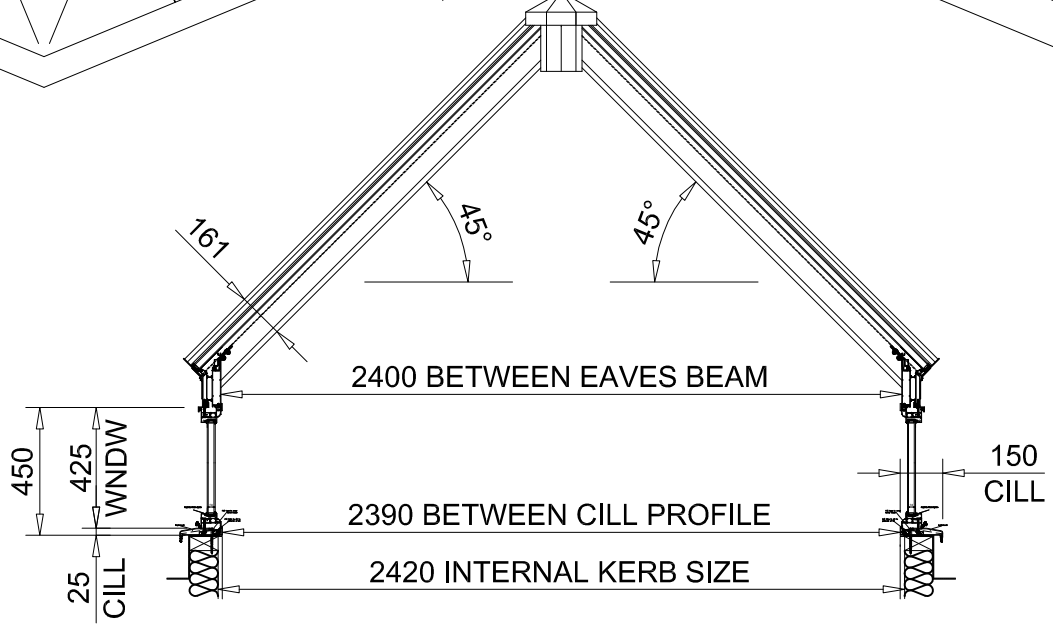

Rev.	Comments	Date

DETAILS by WWD

Howells Patent Glazing
Clock House
Forge Lane
Cradley Heath
West Midlands
B64 5AL
Tel :- 01384 820060
Fax :- 01384 820061
e-mail :-
enquiries@howellsglazing.co.uk

Glass: 28MM DOUBLE GLAZED UNITS COMPRISING 4MM CLEAR TOUGHENED OUTER, 20MM CAVITY ARGON FILLED WITH SILVER SPACER, 4MM CLEAR LOW E TOUGHENED INNER | CENTRE PANE U VALUE = 1.2 W/MK2

Finish: POLYESTER POWDER COATED FINISH REF WHITE RAL 9910 SATIN

Drawing title	Scale	Date	Customer	Site	Contract No.	Drawing No.
OCTAGONAL LANTERN ROOFLIGHT GLAZING	NTS	25/9/2009			C4900	100